Dimension Guide

Oven

Model:
EOG1102COX

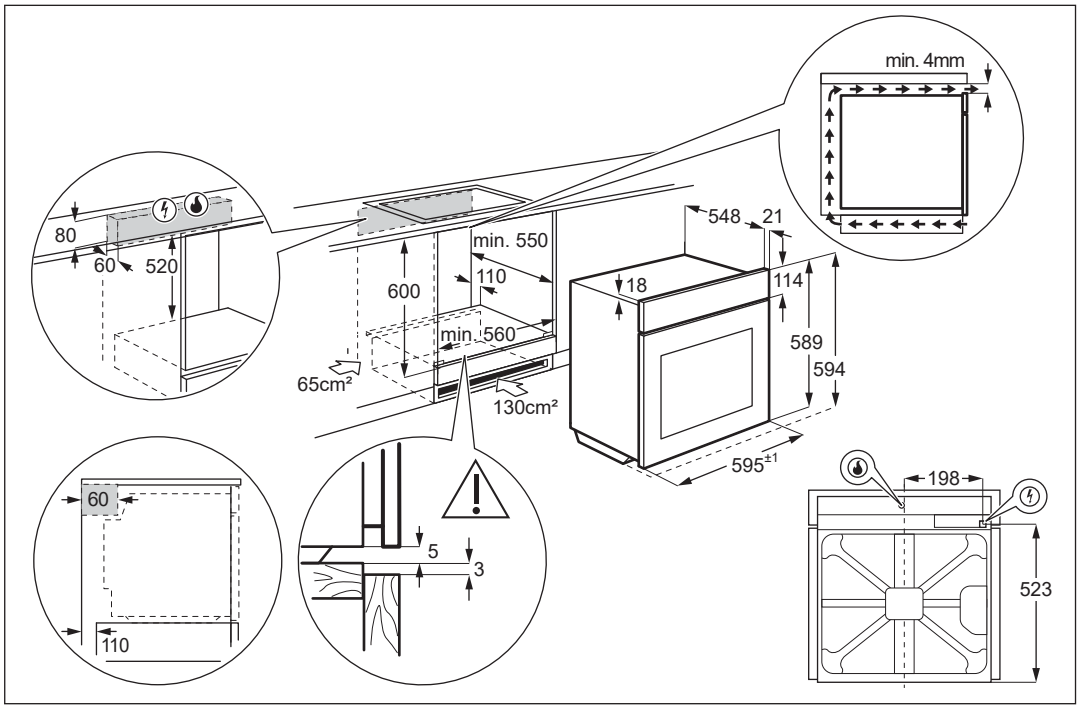

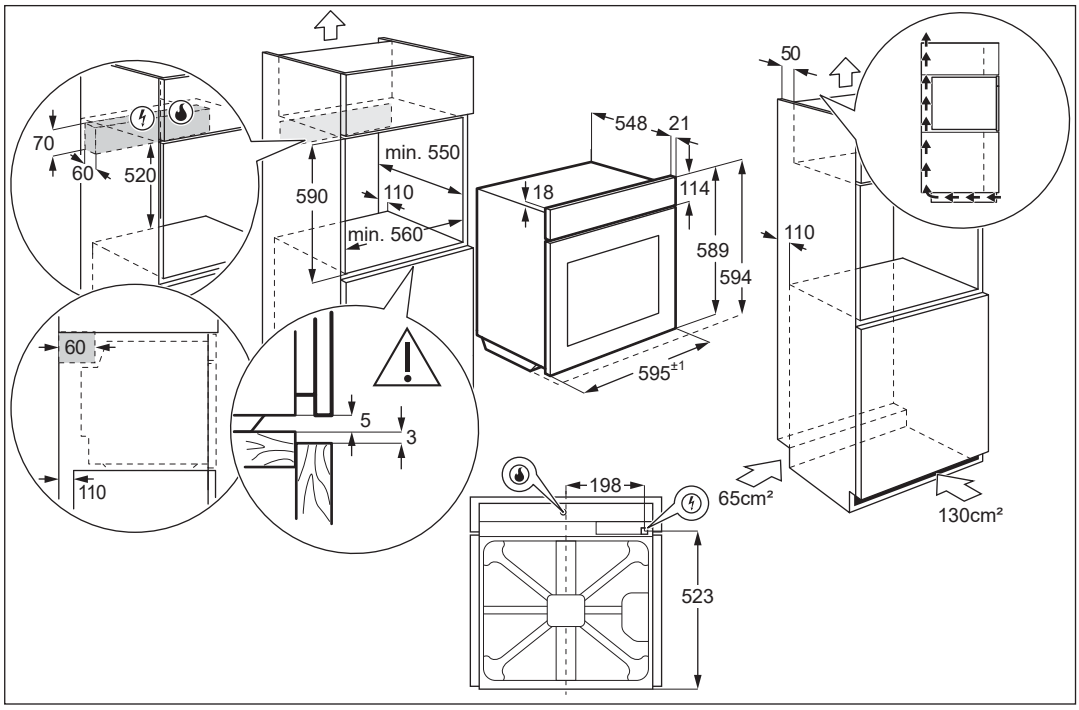

IMPORTANT

This is a guide of product dimensions only. For complete installation instructions, refer to the manual provided with product.

© 2021 Electrolux S.E.A PTE.LTD.. E_DIM_EHI326CB_A4_Apr21

Electrolux